GALİPOĞLU HİDROMAS

Phone : +90 332 239 08 52 (pbx)
Fax : +90 332 239 08 51
Mail : hidromas@hidromas.com
Address : Büyükkayacık Mah. Konya O.S.B. 3 Nolu Sk No:1/A 42250
SELÇUKLU / KONYA
TÜRKİYE

GHS 116 x 3 x 3330 H

Stock Code : 43116333306
Referance No : 01-001

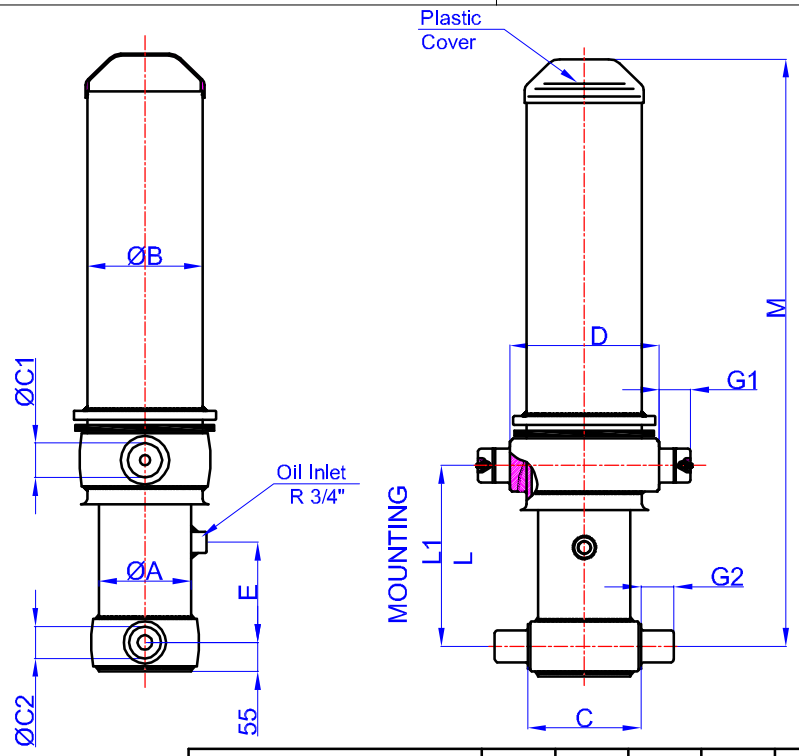

A	:	136	mm
B	:	168	mm
C	:	170	mm
C1	:	44	mm
C2	:	60	mm
D	:	216	mm
E	:	190	mm
G1	:	70	mm
G2	:	60	mm
L	:	343	mm
*L1	:	373	mm
M	:	1380	mm

* Inc 30 mm pull out : tolerance +20 -0

Hard Chromed all stages

Working Pressure : 170 Bar

Max. Working Pressure : 190 Bar

STAGE	1	2	3	4	5	6	7	8	TOTAL
EFFECTIVE DIAMETER (mm)	Ø116	Ø98	Ø80						
STROKE	1110	1110	1110						3330
OIL DISPLACEMENT (L)	12,5	9	6						27,5
THRUST AT 170 BAR (TONS)	18	12	8						

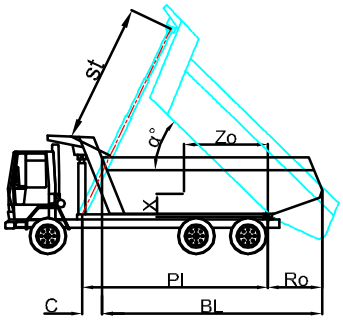

BL (body length)
Ro (rear overhang)
Ycog (vert. pos. centre of gravity)
Pl(Pivot lengt)

$$\alpha° = \frac{st \times 60}{Pl}$$

BL	4100			4000			3900		
Ro	200	400	600	200	400	600	200	400	600
α°	45	48	51	47	49	52	48	51	54
Ycog									
400	21	24	27	22	25	28	22	25	29
700	24	28	33	25	29	36	26	30	38
1000	28	33	40	29	36	42	30	37	43
st	3075	3120	3145	3133	3103	3120	3120	3145	3150

Weight : 133 Kg

Drawing No :43116333206-01-001