HİDROMAS GEAR PUMPS 30 SERIES

17L- 27L - 34L - 43L- 51L - 61L - 82L

17 cc GEAR PUMP-ISO DPA 30-17 DİŞLİ POMPA SAĞ / SOL	Product Code / Ürün Kodu : PDTD300170131 Ref. No : 0002 PDTD300170132	CW CCW

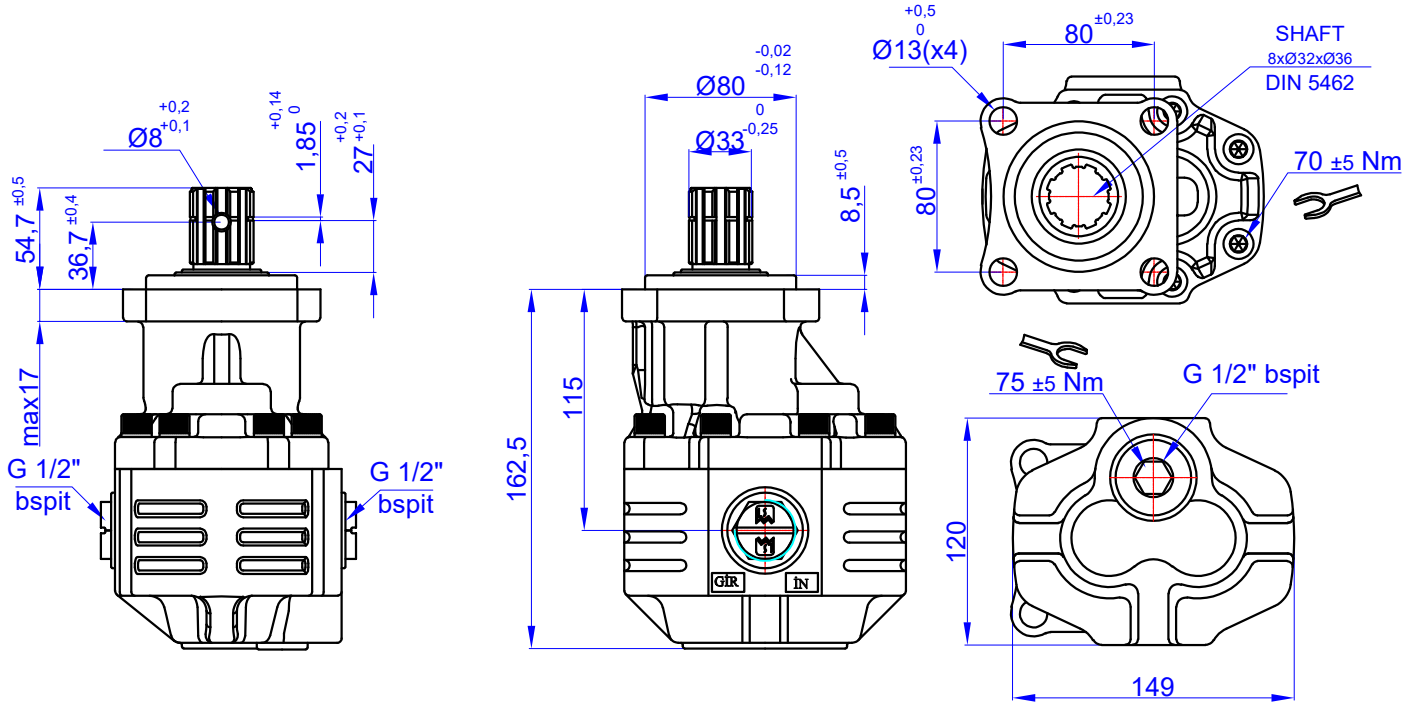

TEKNİK BİLGİLER / TECHNICAL DATA

Specifications		
Displacement	17	cm³/rev
Max. Peak Pressure (P3)	325	bar
Max. Intermittent Pressure (P2) (for tipping applications)	315	bar
Max. Continuous Pressure (P1)	290	bar
Max. Speed at Intermittent Press.	3000	min¬
Min. Speed at Intermittent Press.	300	min¬
Max. Speed at Continuous Press.	2500	min¬
Oil Temperature Range	-40 ~ 80	°C
Inlet Pressure Range (suction side)	0,7 ~ 3	bar
Recommended Oil Viscosity Range	12 ~ 100	mm²/s (cSt)
Max. Starting Viscosity	750	mm²/s (cSt)
Filtration :		
-Working Pressure < 200 bar	25	µm
-Working Pressure > 200 bar	10	µm
Connection :		
Min. Suction Hose Bore Diameter	–	inch
Weight	10,5	kg
Rust prevent oil applied shaft area	protect 12 moths	

Power and Torque					
Pressure (Bar)	50	100	200	250	325
Torque (Nm)	15	30	60	75	98

Power (kW)					
rpm / Bar	50	100	200	250	325
500	1	2	3	4	5
1000	2	3	6	8	10
1500	2	5	10	12	16
2500	4	8	16	20	26
3000	5	10	19	24	31

rpm (n/min)	Flow (L/min)
500	8
1000	17
1500	25
2500	42
3000	50

DİYAGRAMLAR / DIAGRAMS

Power-Pressure Graphic

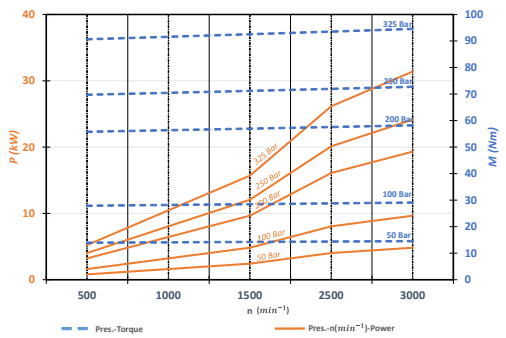

Flow-rpm Graphic

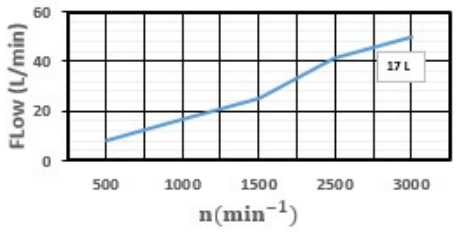

Torque-Pressure Graphic

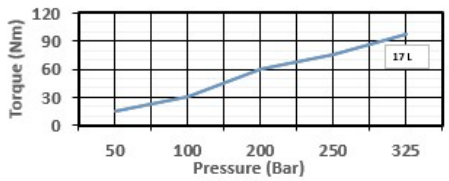

Pressure Definition

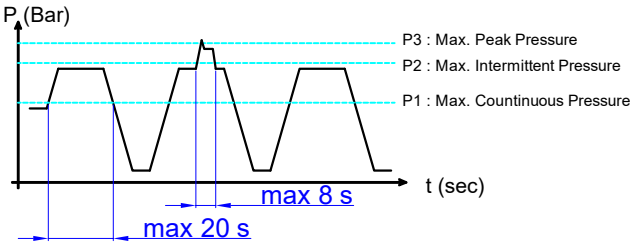

Hydraulic Pump Symbol

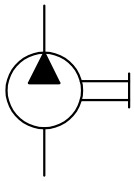

Modifications:24.06.2024 / Rev00 /

Phone : 90 332 239 0852 (pbx) Fax : 90 332 239 0851 • www.hidromas.com • hidromas@hidromas.com