HİDROMAS PISTONS PUMPS

BENT AXIS / 35L - 45L - 55L - 65L- 85L - **105L** - 115L

105L BENT AXIS PISTON PUMPS
7 ELEMANLI EKSENEL POMPA 105L SAĞ / SOL

Product Code / Ürün Kodu : PEX752105131
Ref. No: TP-0006 PEX752105132

CW
CCW

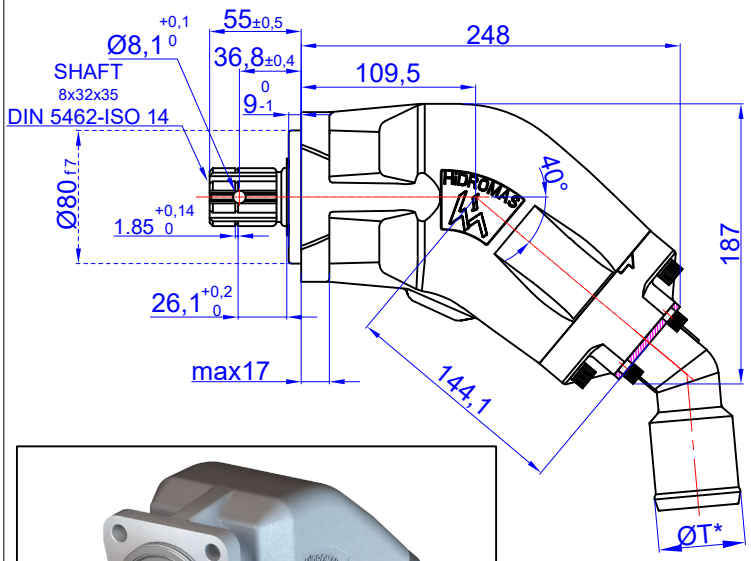

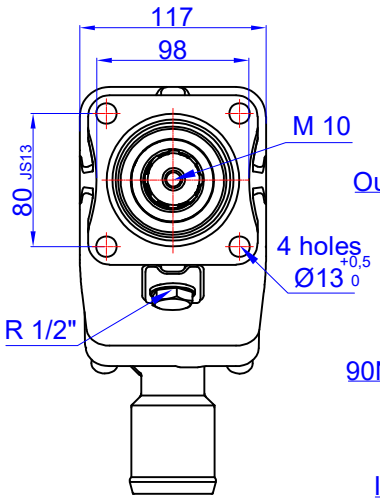

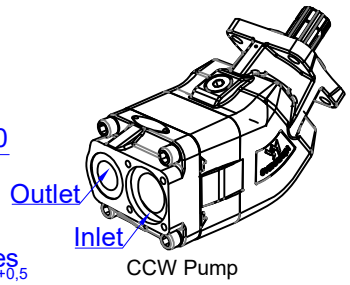

CCW Pump

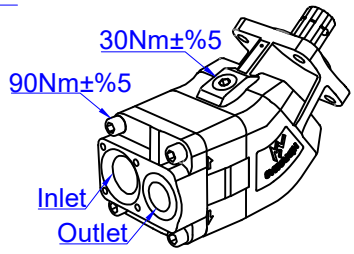

CW Pump

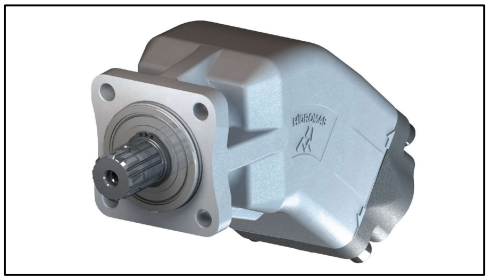

Inlet	Outlet
ØT*	1" BSPIT

ØT*: Emiş ve basınç rakoru ayrı sipariş verilmelidir.
Suction and pres. adapter must be ordered separately.

TEKNİK BİLGİLER / TECHNICAL DATA

Specifications		
Displacement	105	cm³/rev
Max. Peak Pressure (P1)	400	bar
Max. Intermittent Pressure (P2)	380	bar
Max. Continuous Pressure (P3)	350	bar
Max. Speed at Intermittent Press.	2100	min¹
Min. Speed at Intermittent Press.	300	min¹
Max. Speed at Continuous Press.	1700	min¹
Oil Temperature Range	-40 ~ 80	°C
Inlet Pressure Range (suction side)	0,85 ~ 2	bar
Recommended Oil Viscosity Range	12 ~ 100	mm²/s (cSt)
Max. Starting Viscosity	750	mm²/s (cSt)
Filtration :		
Working Pressure < 200 bar	25	µm
Working Pressure > 200 bar	10	µm
Connection :		
Min. Suction Hose Bore Diameter (ØT)	2	inch
Weight	13,5	kg
Rust prevent oil applied shaft area	protect 12 moths	

Power and Torque					
Pressure (Bar)	50	100	200	300	400
Torque (Nm)	93	186	371	557	743

Power (kW)					
rpm / Bar	50	100	200	300	400
500	5	10	20	30	40
1000	10	20	40	60	80
1500	15	30	60	89	119
2000	20	40	80	119	159
2500	25	50	99	149	199
3000	30	60	119	179	239

rpm (rev/min)	Flow (L/min)
500	51
1000	103
1500	154
2000	206
2500	257
3000	309

DİYAGRAMLAR / DIAGRAMS

Power-Pressure Graphic

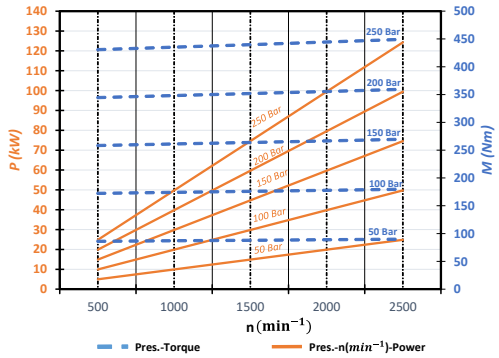

Flow-rpm Graphic

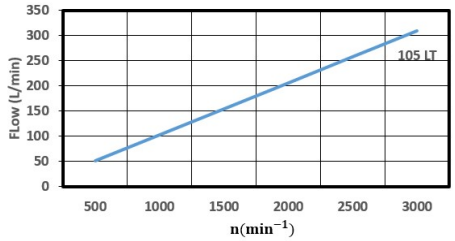

Torque-Pressure Graphic

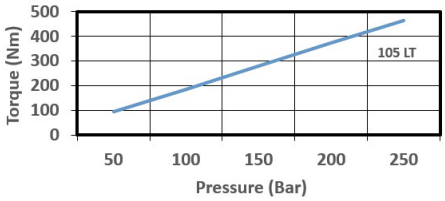

Pressure Definition

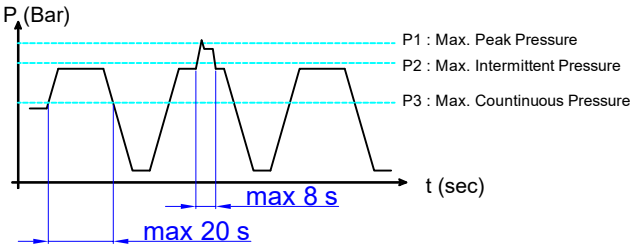

Hydraulic Pump Symbol

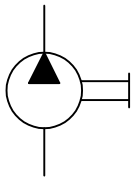

Modifications:23.04.2023 / Rev00 /

Phone : 90 332 239 0852 (pbx) Fax : 90 332 239 0851 • www.hidromas.com • hidromas@hidromas.com