HİDROMAS GEAR PUMPS
30 SERIES / 55L- 65L - 82L

82 cc BI-ROTATIONAL GEAR PUMP-ISO DPA 30-82 ÇİFT DÖNÜŞLÜ (YAN G-Ç) DİŞLİ POMPA	Product Code / Ürün Kodu : PDCD3008220133 Ref. No : 0001

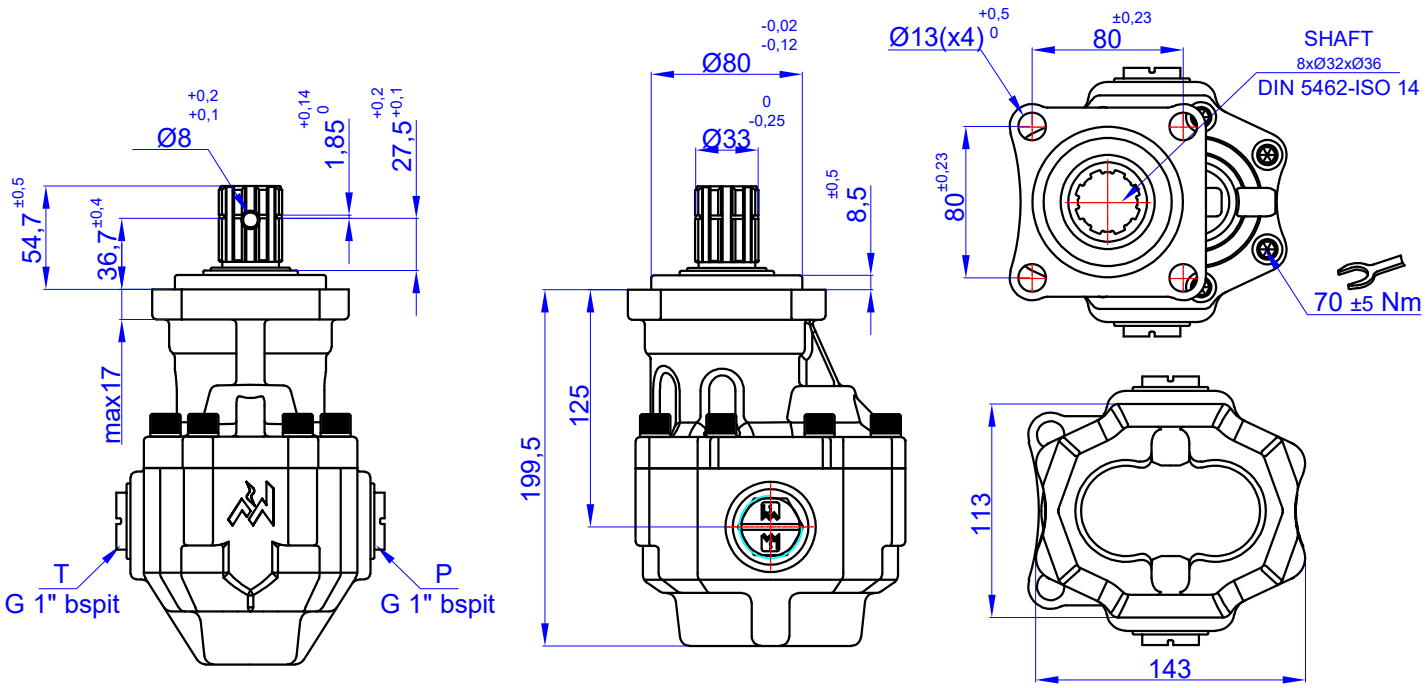

TEKNİK BİLGİLER / TECHNICAL DATA

Specifications		
Displacement	82	cm³/rev
Max. Peak Pressure (P3)	220	bar
Max. Intermittent Pressure (P2) (for tipping applications)	210	bar
Max. Continuous Pressure (P1)	180	bar
Max. Speed at Intermittent Press.	1800	min¯¹
Min. Speed at Intermittent Press.	300	min¯¹
Max. Speed at Continuous Press.	1500	min¯¹
Oil Temperature Range	-40 ~ 80	°C
Inlet Pressure Range (suction side)	0,7 ~ 3	bar
Recommended Oil Viscosity Range	12 ~ 100	mm²/s (cSt)
Max. Starting Viscosity	750	mm²/s (cSt)
Filtration :		
-Working Pressure < 200 bar	25	µm
-Working Pressure > 200 bar	10	µm
Connection :		
Min. Suction Hose Bore Diameter	--	inch
Weight	12.2	kg
Rust prevent oil applied shaft area	protect 12 moths	

Power and Torque					
Pressure (Bar)	50	100	150	200	220
Torque (Nm)	73	145	218	290	319

Power (kW)					
rpm / Bar	50	100	150	200	220
500	4	8	12	16	17
1000	8	16	23	31	34
1200	9	19	28	37	41
1500	12	23	35	47	51
1800	14	28	42	56	62

rpm (n/min)	Flow (L/min)
500	40
1000	80
1200	96
1500	121
1800	145

DİYAGRAMLAR / DIAGRAMS

Power-Pressure Graphic

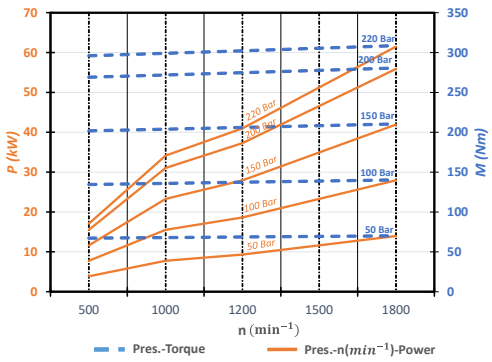

Flow-rpm Graphic

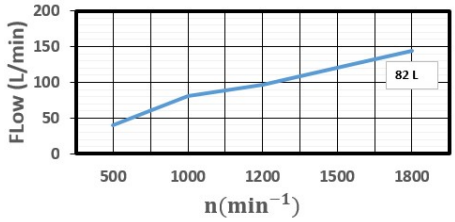

Torque-Pressure Graphic

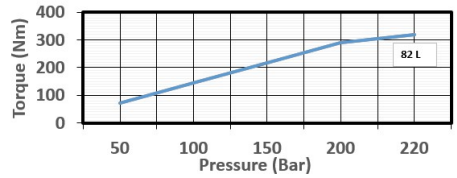

Pressure Definition

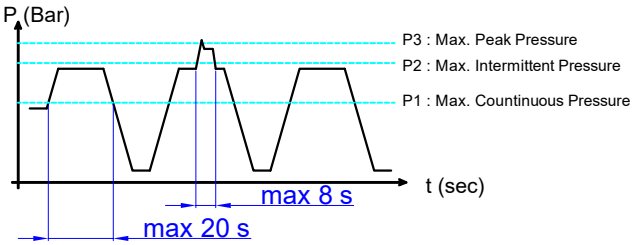

Hydraulic Pump Symbol

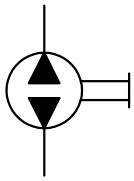

Modifications:24.06.2024 / Rev00 /

Phone : 90 332 239 0852 (pbx) Fax : 90 332 239 0851 • www.hidromas.com • hidromas@hidromas.com