GALİPOĞLU HİDROMAS

Phone : +90 332 239 08 52 (pbx)
Fax : +90 332 239 08 51
Mail : hidromas@hidromas.com
Address : Büyükkayacık Mah. Konya O.S.B. 3 Nolu Sk No:1/A 42250
SELÇUKLU / KONYA
TÜRKİYE

GHS 175 x 5 x 6875 C

Stock Code : 43175568753
Referance No : 01-001

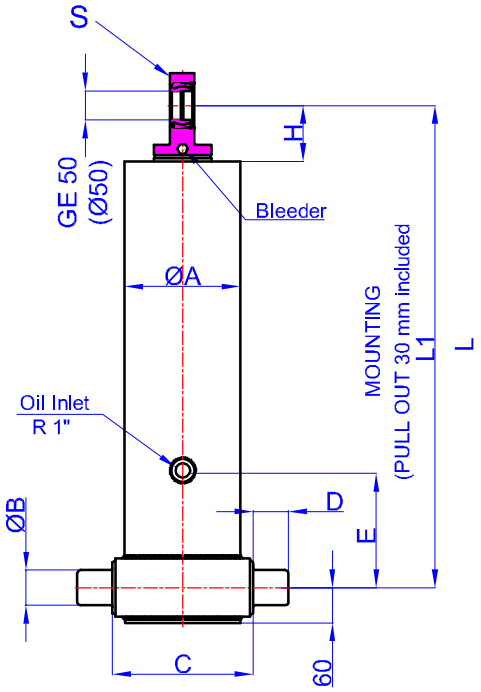

A	:	197	mm
B	:	60	mm
C	:	240	mm
D	:	60	mm
E	:	350	mm
H	:	95	mm
L	:	1697	mm
*L1	:	1727	mm
S	:	42	mm

* Inc 30 mm pull out : tolerance +20 -0

Hard Chromed all stages

Working Pressure : 170 Bar

Max. Working Pressure : 190 Bar

All Cylinder Materials are St 52 Cold Drawn Tubes

STAGE	1	2	3	4	5	6	7	8	TOTAL
EFFECTIVE DIAMETER (mm)	Ø175	Ø154,5	Ø135	Ø116	Ø98				
STROKE	1375	1375	1375	1375	1375				6875
OIL DISPLACEMENT (L)	35	27,5	21	15,5	11,5				119
THRUST AT 170 BAR (TONS)	40	31	24	18	12				

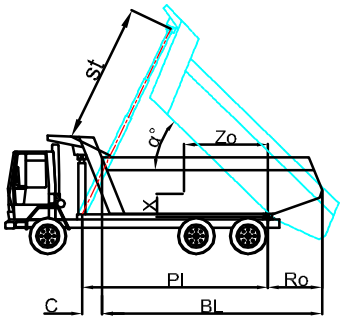

BL (body length)
Ro (rear overhang)
Ycog (vert. pos. centre of gravity)
Pl(Pivot lengt)

$$\alpha° = \frac{st \times 60}{Pl}$$

BL	8800			8600			8400		
Ro	200	500	800	200	500	800	200	500	800
α°	45	46	48	46	48	50	47	49	51
Ycog									
600	33	36	39	34	37	40	35	37	41
900	36	38	42	36	39	43	37	40	45
1200	38	41	46	39	43	48	40	44	50
st	6600	6516	6560	6593	6640	6666	6580	6615	6630

Weight : 283 Kg

Drawing No :43175568753-02-001